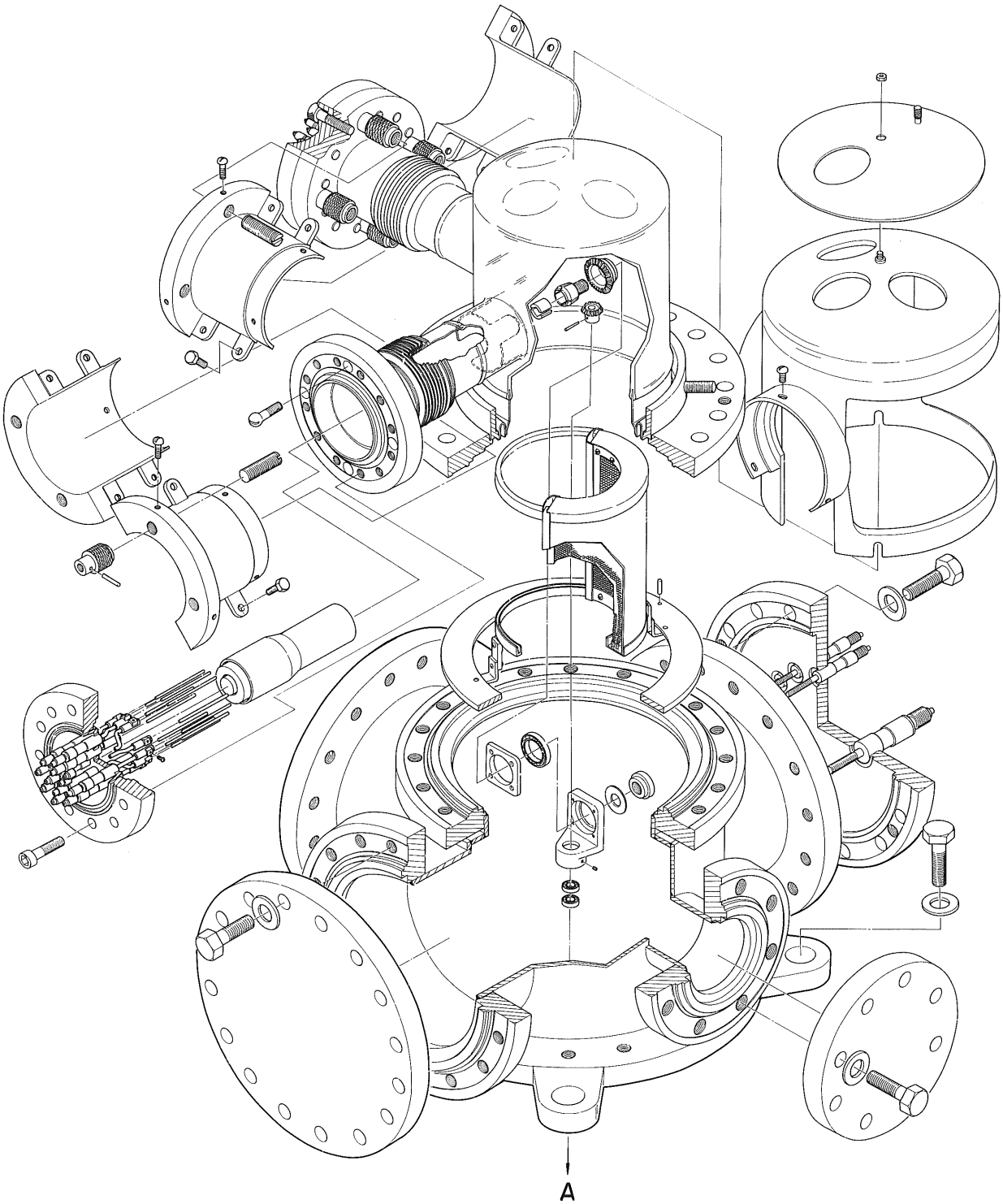
A